Queensland Government
Maritime Safety Queensland

HELICOPTER SAFETY SHEET
HAY POINT and MACKAY HARBOUR
(Information for Ships Masters)

Pilot Helicopter

Specifications

Make/Model	**EC 135**	Bell 222
Clearance Required	**20.2 m**	25.6 m
Maximum Weight	**2900 Kg**	3770 Kg

NOTE: EC135 Helicopter will be used unless otherwise advised

General Information

- For all transfers the helicopter will land on the hatch cover. NO WINCHING.
- Corrigated hatch covers are not a suitable HLS.
- Ships not suitable for helicopter will use pilot launch.

Communications

- Helicopter will contact ship on VHF channel 16 and advise working channel.
- Master to advise helicopter of hatch number and confirm emergency party is standing by.
- Ship to remain on working channel until pilot arrives on bridge.

Preparation of Landing Site

For all Helicopter Operations at this port please arrange the following.

- ☐ All hatches must be closed
- ☐ Access rigged to hatch on fwd or aft end
- ☐ Remove loose objects
- ☐ Secure cranes
- ☐ Hoist pennant or windsock at least 50m away from landing hatch
- ☐ Two fire hoses coupled together with foam nozzle and foam ready
- ☐ Crew member in fireman's suit
- ☐ Dry powder extinguisher
- ☐ Rescue party with equipment to stand-by UPWIND and FWD or AFT of hatch
- ☐ At night all deck lights on
- ☐ All crew to remain clear of hatch top and clear of manoeuvring zone
- ☐ Wash down Helo hatch before departure

Helicopter Landing Site (HLS) Requiements

- HLS should have a non-slip surface.
- HLS should have clear white or yellow markings to indicate the touchdown and maneourvring zones.
- Any obstructions (lugs vents etc) should be clearly painted for maximum visibility.

CORRECTLY MARKED and WELL LIT with any obstructions (lugs vents etc) clearly painted.

HATCH COVER
Helicopter Landing

Helicopter will APPROACH FROM DOWNWIND. Keep all crew and equipment (including fire hoses) clear of approach and departure paths. Crew must stay clear of hatch top and must not approach helicopter.

CRANES must be stowed in normal sea position or swung clear of HLS by at least 150° so that the crane end jib is within the confines of the ship. Crane block must be secured to deck.

Rig ACCESS on FWD or AFT side of hatch.

Position RESCUE PARTY UPWIND and fwd or aft of HLS.

All HATCHES must be CLOSED.

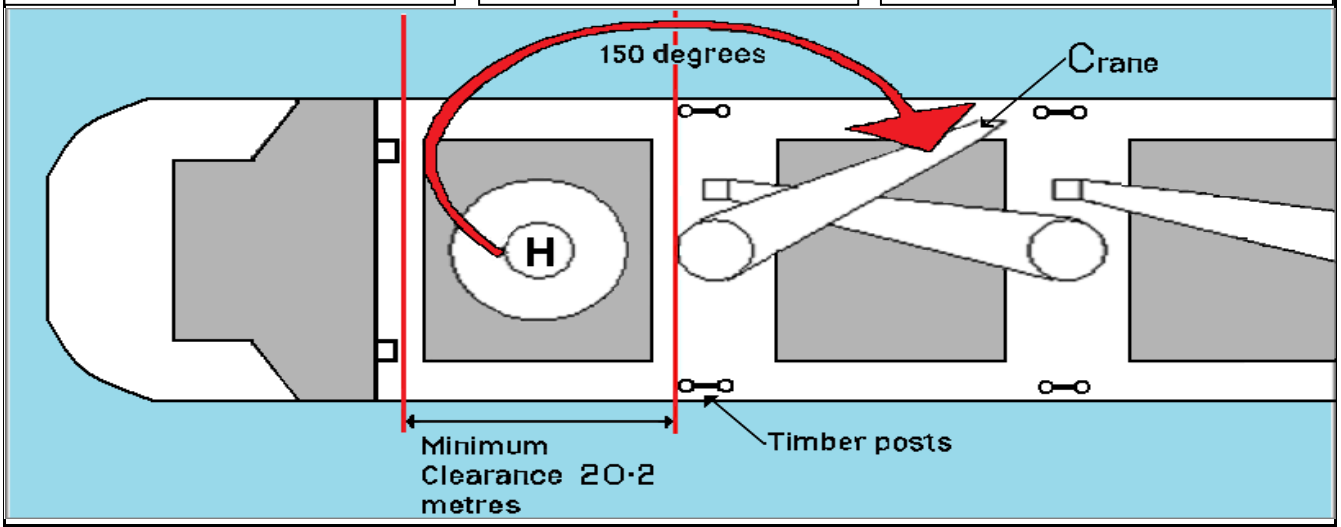

For more detailed information please refer to the
ICS Guide to Helicopter Operations